Manfrotto

Imagine More

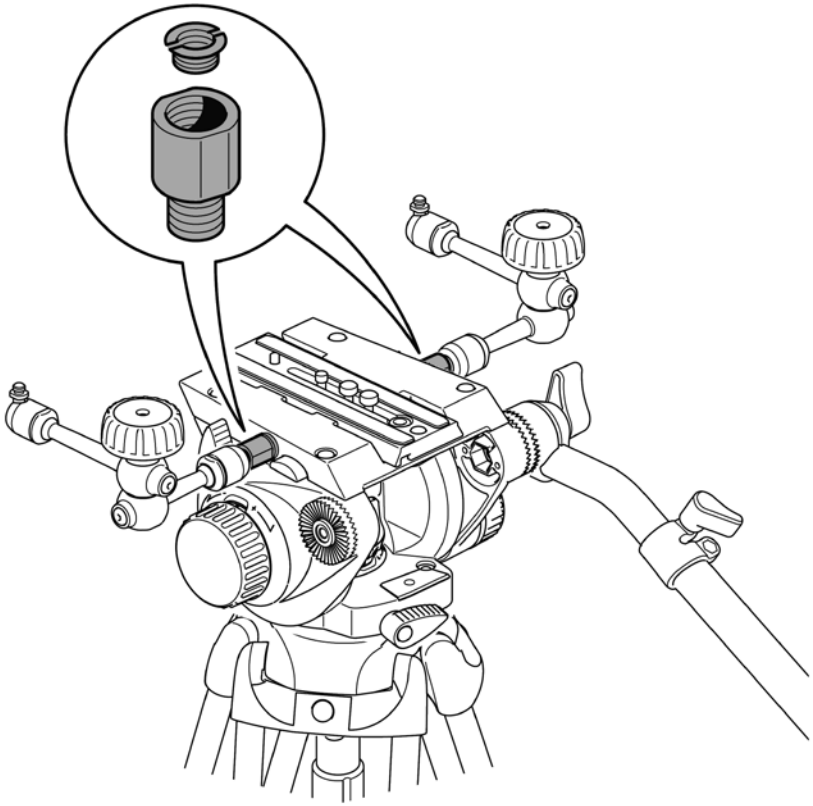

MVA500 INSTRUCTIONS

SYMPLA™
SYSTEM MOVING PLATFORM

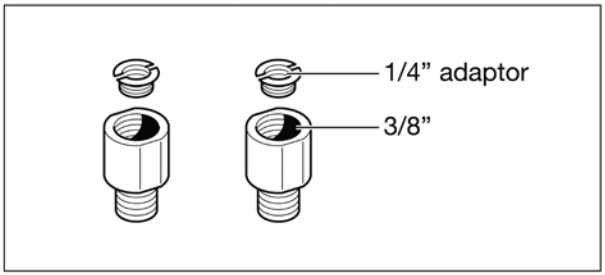
1/4” adaptor
3/8”

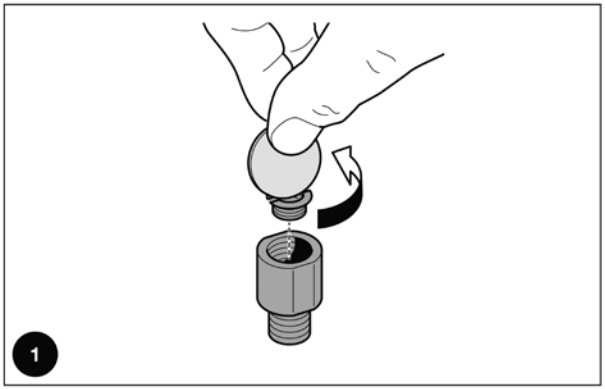
1

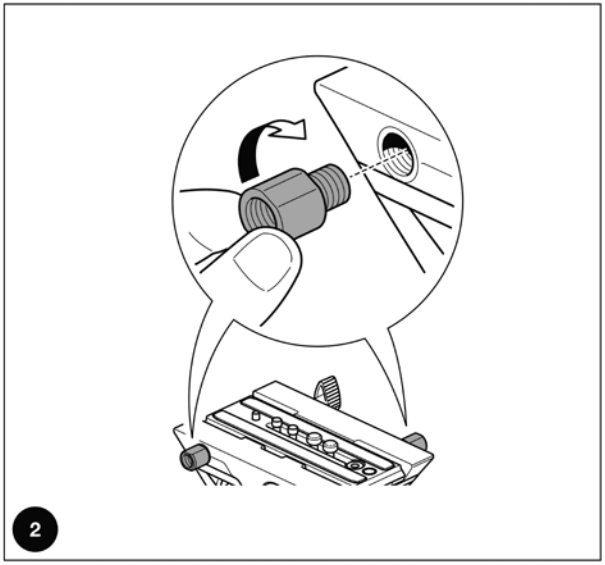
2

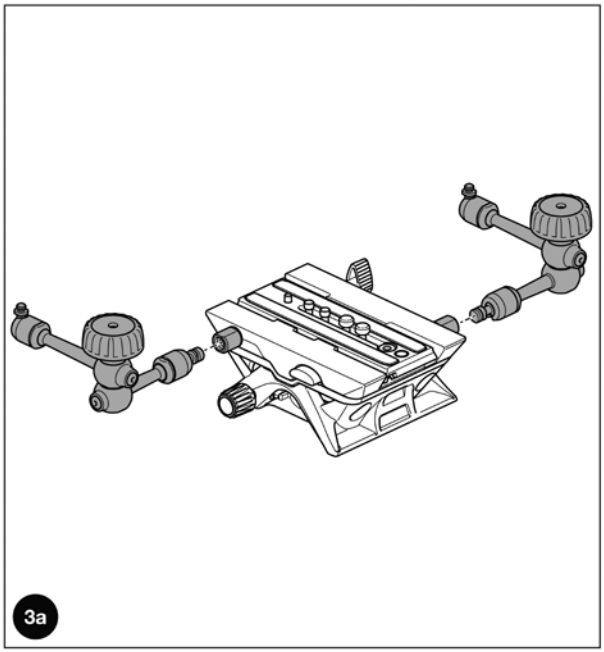
3a

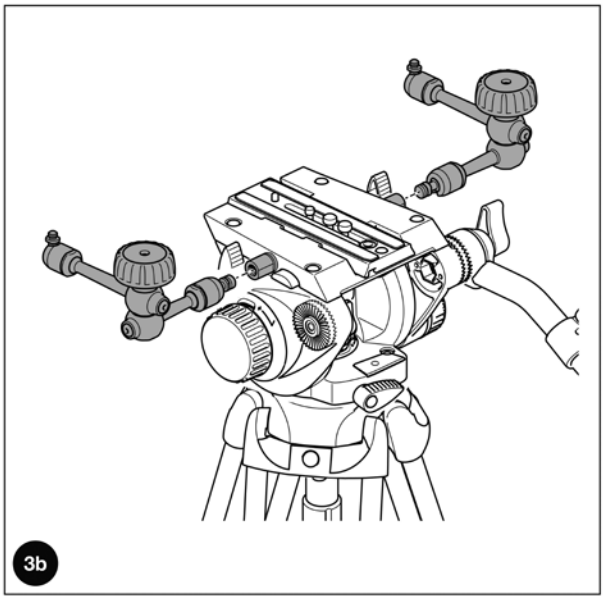
3b